NAVAJO COUNTY

ADDENDA & ADDITIONS

TO THE INTERNATIONAL BUILDING CODES

Public Works/Planning & Zoning
Building & Safety

AMENDED (05-02-05)
(UPDATED 01-29-09)

NAVAJO COUNTY GOVERNMENTAL COMPLEX
P.O. BOX 668
HOLBROOK, ARIZONA 86025

2005-11368
Page 1 of 1
Requested By: BOARD OF SUPERVISORS
Navajo County Recorder - Lauretta Justman
05-09-2005 08:00 AM Recording Fee $0.00

RESOLUTION NO. 34 -05

A RESOLUTION OF THE NAVAJO COUNTY BOARD OF SUPERVISORS, AMENDING THE NAVAJO COUNTY ADDENDA AND ADDITIONS TO THE INTERNATIONAL BUILDING CODE

WHEREAS, the Navajo County Technical Code Advisory and Appeals Board held a duly noticed public hearings pursuant to ARS § 11-251 on January 25, March 3, and April 7, 2005 for the purpose of considering certain proposed amendments to the Navajo County Addenda and Additions to the International Building Codes to bring them more in line with current construction practices; and

WHEREAS, the Navajo County Technical Code Advisory and Appeals Board adopted Resolution No. 05-1A, on April 7, 2005, recommending the adoption, of said amendments to the Navajo County Addenda and Additions to the International Building Code, by the Navajo County Board of Supervisors; and

WHEREAS, after giving notice pursuant to ARS §§ 11-251, the Board of Supervisors held a public hearing on May 2, 2005 and determined that the recommended amendments to the Navajo County Addenda and Additions to the International Building Codes would be appropriate and in the interests of the public health, safety and general welfare.

NOW, THEREFORE, BE IT RESOLVED by the Board of Supervisors that the amendments to the Navajo County Addenda and Additions to the International Building Code are APPROVED and the attached document shall be used in conjunction with construction in the unincorporated portions of Navajo County. See attached document.

PASSED AND ADOPTED by the Board of Supervisors of Navajo County on May 2, 2005.

NAVAJO COUNTY BOARD OF SUPERVISORS

By Jerry Brownlow
Jerry Brownlow, Chairman of the Board

ATTEST:

James G. Jayne
Clerk of the Board

ATTACHMENT: Approved Navajo County Addenda and Additions to the International Building Code

Table of Contents

Page

Area Offices 2
Adopted Codes 3
Issuance of Permit 3
Design Criteria 4
Permits Required 5
Required Inspections 5
Foundations, Piers and Stem Walls ..... 6 thru 10
Floors 11
Roofs 11
Framing 11
Electrical 12
Plumbing 12
Drywall 13
Final Inspection 13
Illustrations
Typical Footings, Piers and Stem Walls ..... 7 thru 10
Furnace Installation Attic 14
Furnace Installation Crawl Space 16
Drain Pan Guidelines 17
Typical Deck and Porch 18
Typical Room Addition 19
Framing Terminology 20
Span Tables
Girder and Header Spans for Exterior Walls 21
Header Spans for Non-Bearing Walls 22
Joists and Rafters 22

Public Works/Planning & Zoning
Area Offices

www.navajocountyaz.gov

<u>Holbrook Area</u>
Holbrook
Woodruff
Joseph City
Sun Valley
Adamana
Winslow

Navajo County
Planning & Zoning
P.O. Box 668
100 East Code Talkers Dr.
Holbrook, AZ 86025
928 524-4100
928 524-4399 (FAX)

<u>Show Low Area</u>
Show Low
Pinetop
Lakeside
Linden
Pinedale
Concho
Taylor
Snowflake

Navajo County
Building & Safety

550 N 9th Pl
Show Low, AZ 85901
928-532-6040
928-532-6044 (FAX)

<u>Heber/Overgaard Area</u>
Clay Springs
Aripine
Chevelon Retreat
928-535-7110
928-535-7114 (FAX)

Navajo County
Building & Safety
P.O. Box 1212
2188 W. Country Club Dr.
Overgaard, AZ 85933

GENERAL NOTES

Adopted Codes

- All 2006 International Building, Electric, Plumbing, and Mechanical Codes
- 1996 National Electric Code is used as supplementary references.

Conflicts

If there is a conflict between code(s) as adopted by either Navajo County or the State of Arizona and this Addenda and Additions, the more restrictive shall prevail. The Navajo County Technical Advisory Board shall act as the Board of Appeals in such matters.

Certificate of Occupancy

No building or structure shall be used or occupied, and no change in the existing occupancy classification of a building or structure or portion thereof shall be made until the Building Official has issued a Certificate of Occupancy.
Exception: Navajo County does not prohibit the occupancy of a single-family non-commercial dwelling by the owners of said property during the finishing phases of construction, but only with an ***approved and completed*** *septic / sewer system.*

Issuance of Permit

No building, manufactured home, or meter loop (electrical hook-up) permit will be issued unless hook-up to an **approved** sanitary system is available. Documentation of the system will be required.

Design Criteria

Engineering
Any Structure built for commercial use as well as any steel, log or post and beam type construction, shall be approved and stamped by an architect or engineer registered in the State of Arizona. This policy is at the discretion of the Technical Advisory Board and the Board of Supervisors.

DESIGN LOADS

Area	Wind/Exposure	Seismic	Roof Pitch	Snow Load PSF
Heber/Overgaard	80 mph / B	B	0:12 up to 4:12	45 PSF
Pinetop/Lakeside	80 mph / B		4:12 or greater	40 PSF
Show Low	80 mph / B			
Clay Springs	80 mph / C	B	0:12 up to 4:12	35 PSF
Pinedale	80 mph / B		4:12 or greater	30 PSF
Snowflake/Taylor	80 mph / C			
Shumway	80 mph / B			
Holbrook	80 mph / C	B	0:12 up to 4:12	25 PSF
Joseph City	80 mph / C		4:12 or greater	20 PSF
Winslow	80 mph / C			
Woodruff	80 mph / C			

Note: All Signs to be designed for a load of 100 mph.
All Greenhouses designed for 100 PSF live load.

Permits Required IBC 105.1

Any owner or authorized agent who intends to construct, alter, move, enlarge or change the occupancy of a building or structure shall first make application and obtain the required permit.

Work Exempt From Permit IBC 105.2

1. One story detached(a) accessory structures, provided the floor area does not exceed 144 square feet.
2. Fences not over 6 feet high.
3. Retaining walls not over 4 feet in height measured from the bottom of the footing to the top of the wall.
4. Flat work, sidewalks and driveways if not more than 30 inches above adjacent grade and not above any basement or story below.
5. Replacement of roof coverings or exterior siding.
6. Interior remodeling not exceeding $1000.00 in materials & labor

(a) Detached generally means a required 15 ft separation between structure, see the specific zoning requirements for you project.

Required Inspections

1. Septic systems.
2. Footing steel
3. Stem steel
4. Under-slab copper, sewer, electrical.
5. Under-floor framing…BEFORE FLOOR SHEETING.
6. Roof sheathing & Shear panel nail-off.
7. Rough-in Framing, Electrical, Plumbing, Venting and Heating.
   (House must be weather-sealed prior to rough-in inspections)
8. Drywall nailing.
9. Final Inspection.
10. Additional inspections may be required for specialized projects.

All inspections must be performed and work approved before issuance of a Certificate of Occupancy.

Foundations, Piers and Stem Walls

1. Footing rebar is required to be placed 6 inches below the surface of the poured concrete, and 3 inches minimum from all soil.
2. Due to most ground conditions in Navajo County, it is recommended that a UFER wire be installed in the footing before pouring. (Minimum 20' into footing)
3. All CMU stem walls shall have bond beams in the top course and at 48 inch intervals maximum.
4. Any CMU stem wall under 60 inches in height shall be a minimum of 8 inches in width with ½ inch diameter reinforcing steel at 48 inches on center and 1 ft. min. from each corner. The vertical steel shall be embedded at a minimum of 6 inches into the concrete footing. Garages may use 6 inch width stem but limited to 3 courses (2 feet high).
5. Any basement or stem wall 60 inches or more in height shall be a minimum of 8 inches in width and have 5/8 inch diameter rebar at 24 inches on center in both the horizontal and vertical direction.
6. Dur-o-wall may be used in lieu of rebar for the non-bond beam horizontal reinforcement, if desired.
7. All CMU cells containing reinforcing steel shall be grouted solid.
8. All steel laps shall be a minimum of 40 diameters and tied.
9. In walls over 8 feet in height, the steel bond beam and footing requirements may be changed at the discretion of the building official if site conditions so dictate.
10. Fibermesh concrete (3000 psi) may be substituted for 6"x 6"-10/10 wire in slabs.
11. All pier footings shall be 24"x24"x24" with 12" thick concrete.
12. For porches or decks, concrete piers up to 24 inches in height shall be a minimum of 8"x8"x16" CMU grouted solid or 12" diameter tubular concrete.
13. Concrete piers over 24 inches in height shall be a minimum of 16"x16" CMU grouted solid or 18 inch diameter tubular concrete.
14. Single story stem wall footings shall be 18" wide & 18" deep with 10" of concrete. Footings for block, log, and/or two stories shall be 24" X 24" with 12" of concrete.
15. Single story piers shall have two (2) ½" vertical rebars. Piers for block, log, and/or two stories shall have four (4) ½" vertical rebars.
16. Compaction testing is required for fill in excess of 12" deep.

FOUNDATIONS Continued

All foundation requirements are included as addenda & additions to Current I.B.C.

MONOLITHIC POURED SLABS

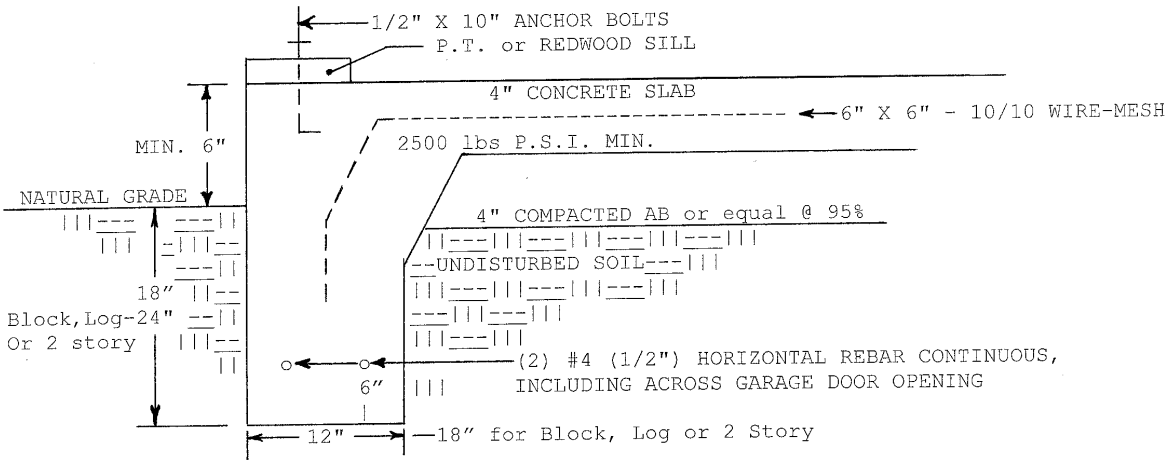

NOTE: FIBERMESH CONCRETE @ 3000 PSI MAY BE SUBSTITUTED FOR 6" X 6" - 10/10 WIRE-MESH

PIERS & PIER FOOTINGS

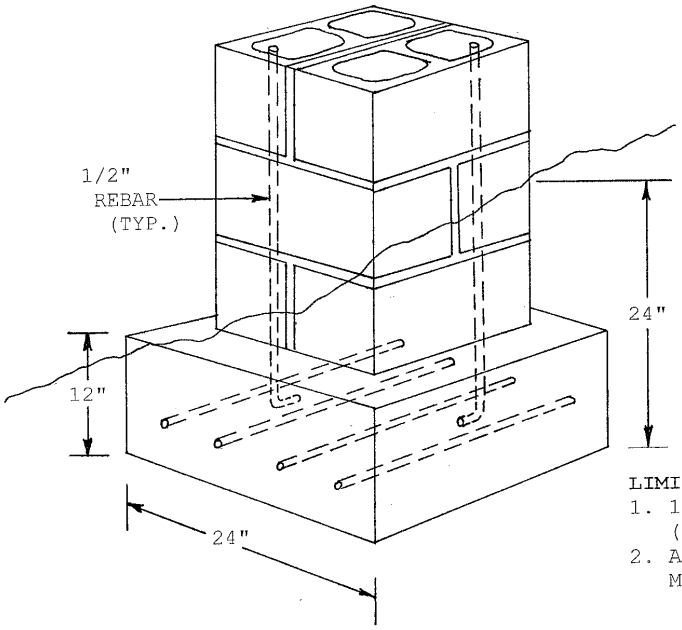

STEM WALL FOOTING DITCH

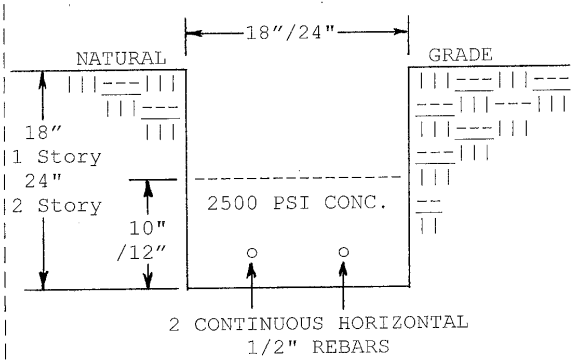

LIMITATIONS OF PIERS POURED INTO TUBE FORMS:

1. 12" & 16" TUBES: UP TO 24" IN HEIGHT (Porches & Sheds ONLY)
2. ANY PIER MORE THAN 24" ABOVE GRADE REQUIRES A MINIMUM TUBE DIAMETER OF 18".

All foundation requirements are included as addenda & additions to Current I.B.C.

PIERS - 16" X 16" SQUARE

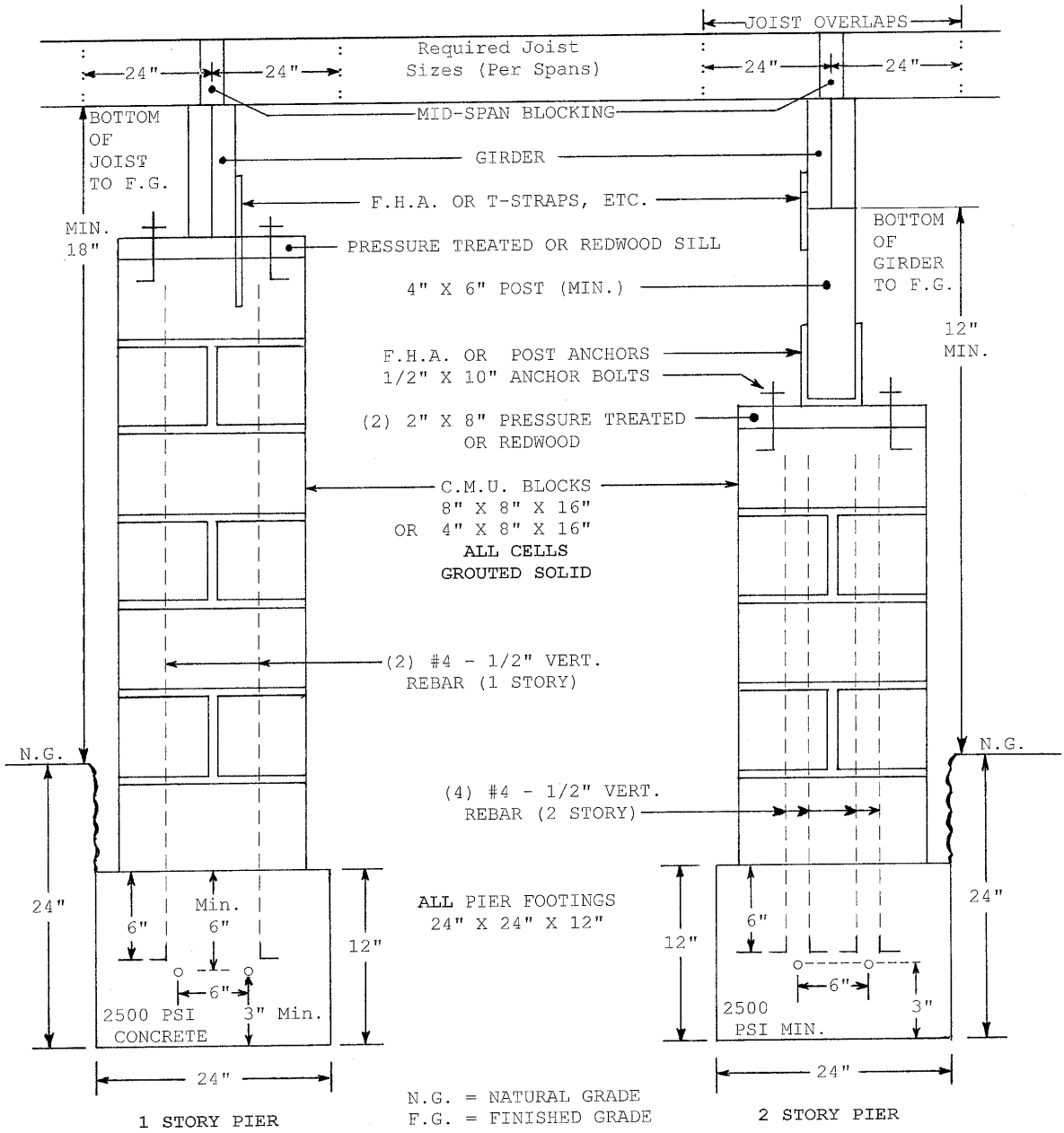

FOUNDATIONS Continued

All foundation requirements are included as addenda & additions to Current I.B.C.

STEM WALLS - TYPICAL

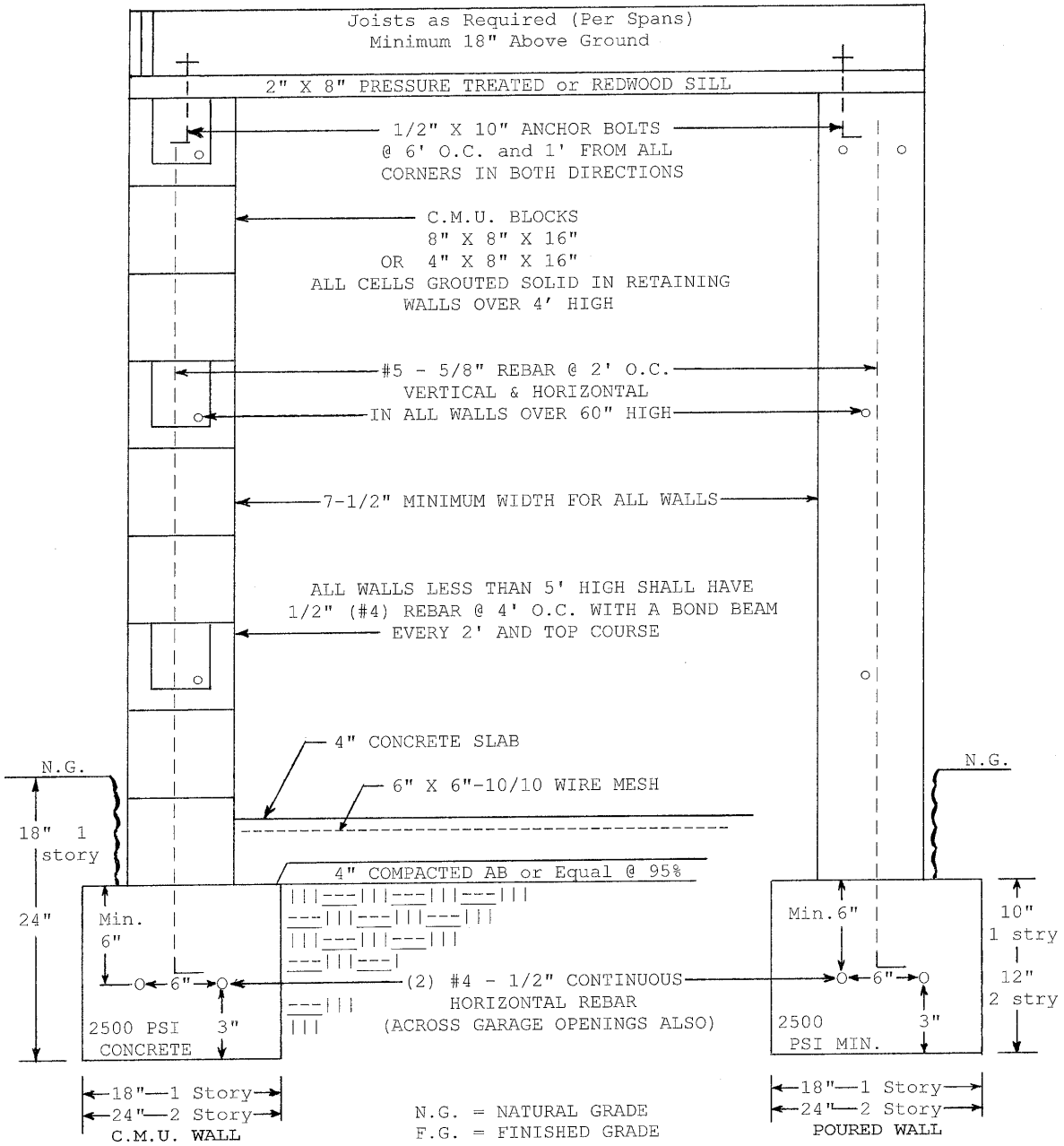

FOUNDATIONS Continued

All foundation requirements are included as addenda & additions to Current I.B.C.

POST & BEAM CONSTRUCTION WITH FOOTINGS

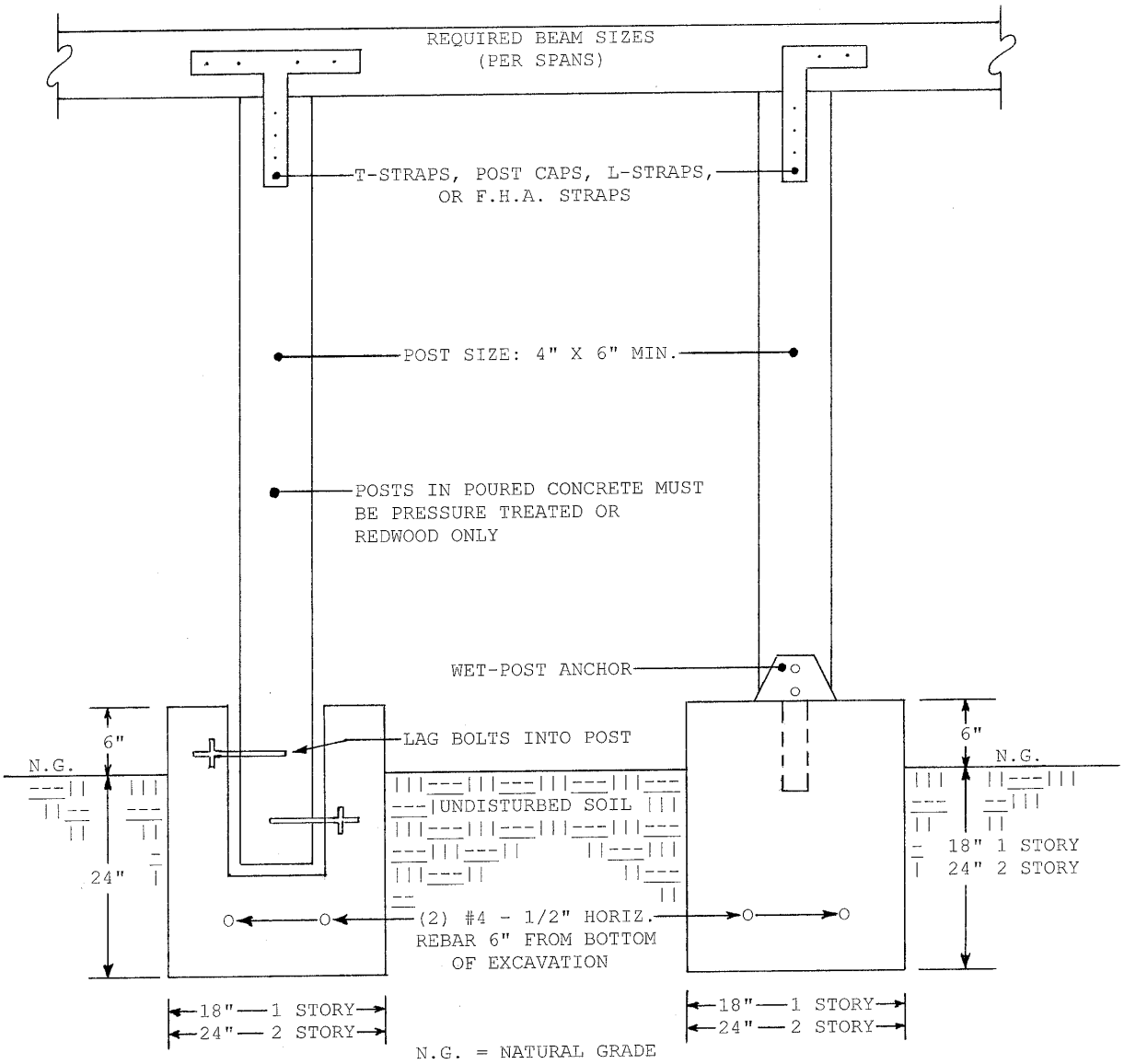

Floors

1. All under-slab plumbing, electrical and mechanical shall be inspected and approved before placement of concrete.
2. Wood floor framing shall be inspected and approved before placement of sheathing. (Minimum ¾" T. & G.)
3. All bearing points of girders must be strapped by approved means.

Roofs

1. Roof sheathing nail spacing (6" on edges & 12 " in fields) shall be inspected and approved before placement of roofing material.
2. Trusses shall be engineered and manufactured for all imposed loads including any mechanical equipment or concrete roofing etc..
3. Roof sheathing face grain shall be at right angles to rafters with the following ratios: 5/8" sheathing : rafters at 24" O.C. 3/4" sheathing : rafters at 32" O.C. 1/2" sheathing may be used only on unattached accessory buildings with rafters at 16" O.C.

Framing

1. All headers to be box or double 2x material on edge. Flat or "California" type headers are **not** allowed.
2. All walls shall have double top plates (48" Minimum Overlap).
3. Metal hurricane straps (e.g. H2.5s) must be secured at each end of each rafter to the double top plates of walls.
4. All 2x4 framed walls, 16 inch on center maximum.
5. End wall ladder backing is not allowed.
6. Ceiling height in livable areas shall be a minimum of 7 ft 6 inches with the exception of bathrooms, kitchens and hallways which may be reduced to 7 feet.
7. All walls shall be braced for shear.
8. Engineering calculations and design data may be required for any unusual design, at the discretion of the building official, prior to issuance of a building permit.
9. Attic access openings must be 30 " x 22 " minimum.

Electrical

1. Inspections based on 2003 I.E.C. and referenced with 1996 National Electric Code.
2. All receptacle wiring shall be 12 AWG minimum on 20 Amp circuit.
3. Separate lighting circuits may use 14 AWG with 15 Amp breakers.
4. Bathrooms must be on their own separate circuit.
5. Ground Fault Circuit Interrupters are required for:
   a. All receptacles in bathrooms
   b. All receptacles within 6 feet of water
   c. All countertop receptacles
   d. All exterior receptacles (Must have weather-proof cover)
   e. All receptacles in garages and unfinished basements
   f. All temporary receptacles.
   g. All circuits providing power to spas or hot tubs and any convenience outlet within 10 feet of unit.

Plumbing

1. Inspections based on 2003 I.P.C. and referenced with 1994 Uniform Plumbing Code.
2. All venting through the roof shall be a minimum of 2" in diameter.
3. LPG service, facilities, supply, or storage shall **not** be installed in a basement, pit, or crawlspace.
4. All fireplaces supplied with gas log lighters shall have a key type gas valve installed outside the hearth and within three feet of the device.
5. No atmospheric valve type venting (e.g. Studor brand vents) will be allowed without prior approval from the Building Official. (Attic placement prohibited)

Drywall

1. Green board shall not be installed on ceilings.
2. Sheetrock shall not be installed on the exterior of any structure.
3. ATTACHED GARAGES: All ceilings and walls common with a dwelling, shall be 5/8' type X sheetrock minimum. (Solid core doors with self closing hinges are required at the dwelling access.)
4. Fastener spacing: Ceilings = 6" on edges 8" in fields
   Walls = 7" on edges 12" in fields

FINAL INSPECTION CHECKLIST

1. Septic and plumbing in total working order.
2. Concrete approach pads, guard and hand rails at correct heights & spacings.
3. Electric panels labeled, and outlets closed up and properly working.
4. GFCIs and inter-connected smoke detectors installed where required.
5. Furnace and water heater rooms vented with self closing doors as required for gas. T&P valves plumbed to outside.
6. Solid core, self closing door from garage to dwelling.
7. No obstructions in stem wall or attic access openings.
8. Yard landscaped for proper water drainage.
9. Spark arrester installed and chimney capped.
10. Garage door operable
11. No under-floor L.P.G. units
12. Proper fall on sewer lines & no debris in crawlspace
13. Culvert installed (if required).
14. Additional inspections may be required as site conditions dictate.
15. A Temporary Certificate of Occupancy may be issued for a single family dwelling (with a completed and approved sanitary system) contingent upon corrections and/or completion within 60 days from the date of this inspection.

ATTIC FURNACE INSTALLATION

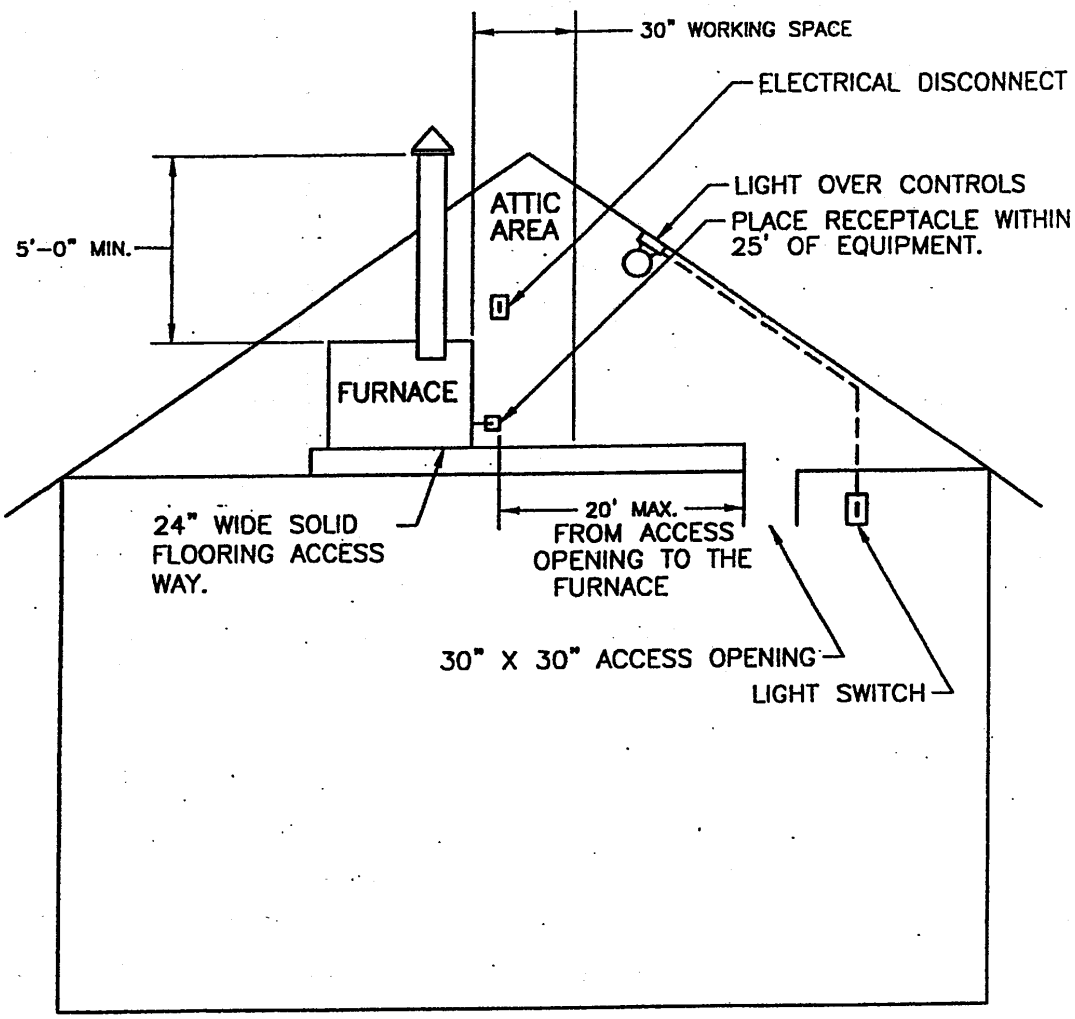

* NOTES:

1. THIS DIAGRAM IS NOT FOR INSTALLATION OF LIQUID PETROLEUM GAS.
2. A MINIMUM OF 30" ATTIC HEADROOM IS REQUIRED FOR FURNACE INSTALLATION.

ATTIC FURNACE INSTALLATION HUNG FROM RAFTERS WITH PAN FOR L.P.G.

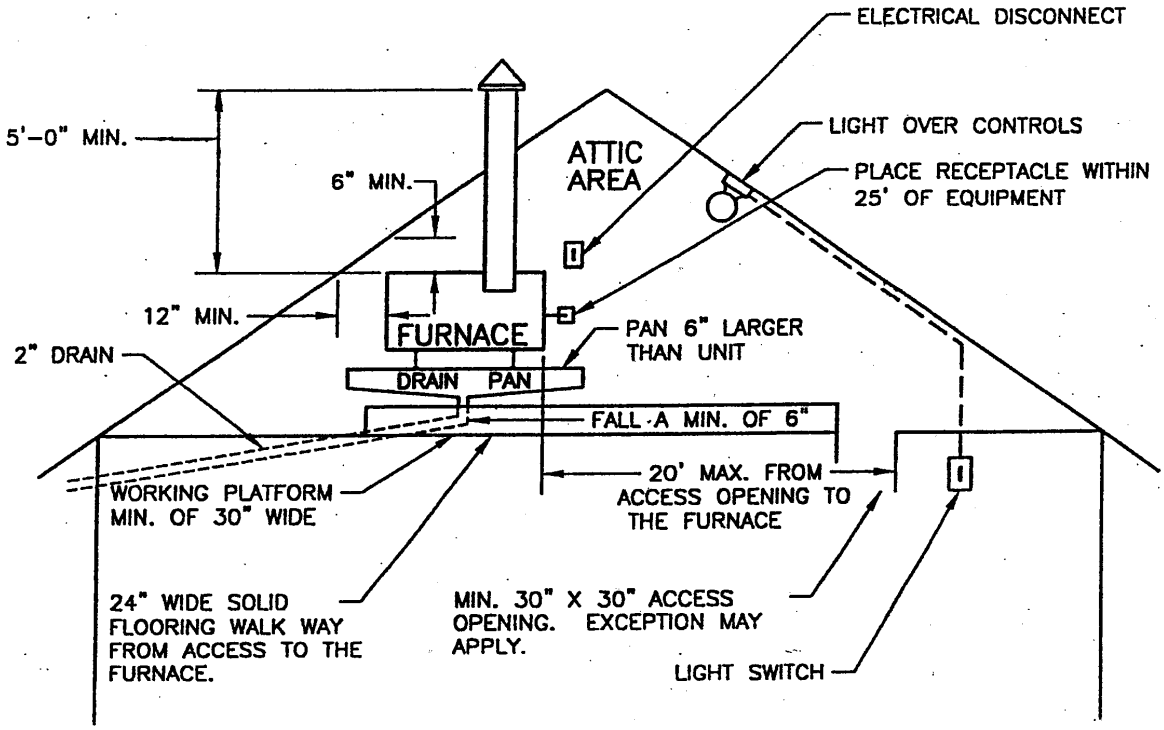

NOTES:

1. ALL SUPPORTING TRUSSES MUST BE ENGINEERED TO HANG UNIT.
2. ALL RAFTERS ON WHICH UNIT IS HUNG SHALL BE DOUBLED.
3. A MINIMUM OF 30 " ATTIC HEADROOM IS REQUIRED FOR FURNACE INSTALLATION.
4. ATTIC VOLUME SHALL BE NO LESS THAN 50 CUBIC FT. PER 1000 BTU APPLIANCE RATING.
5. L.P.G. UNITS REQUIRE A DRAIN PAN AND VENTS IN THE LOWEST PART OF THE ATTIC.

FURNACE SUPPORTED FROM GROUND

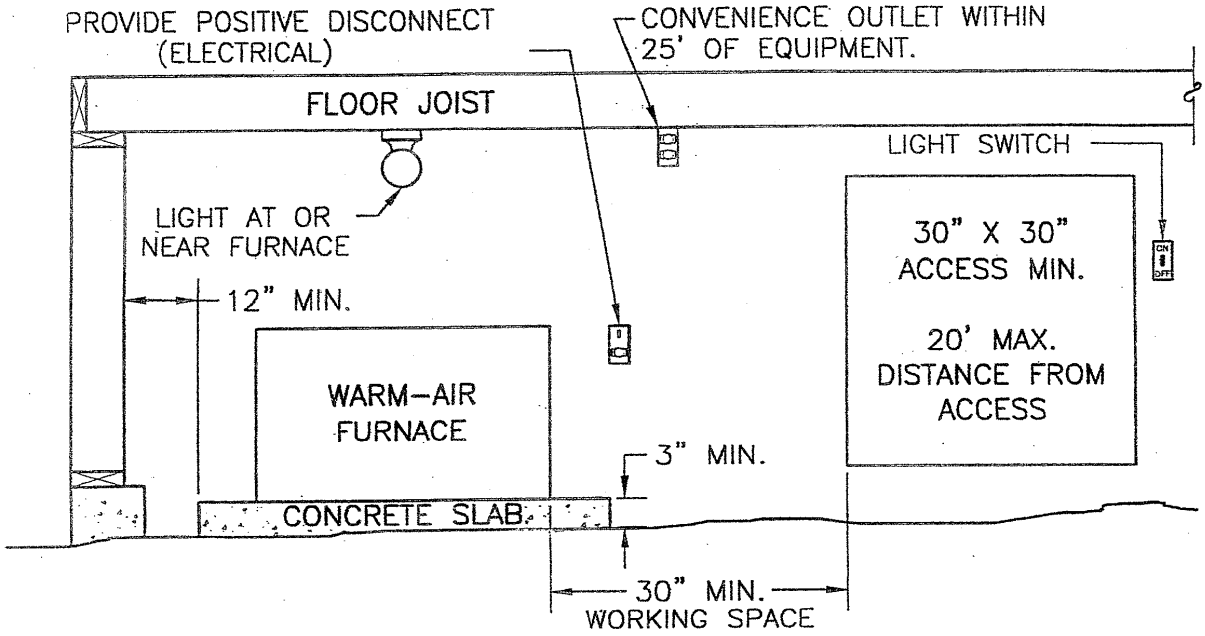

SUSPENDED FURNACE

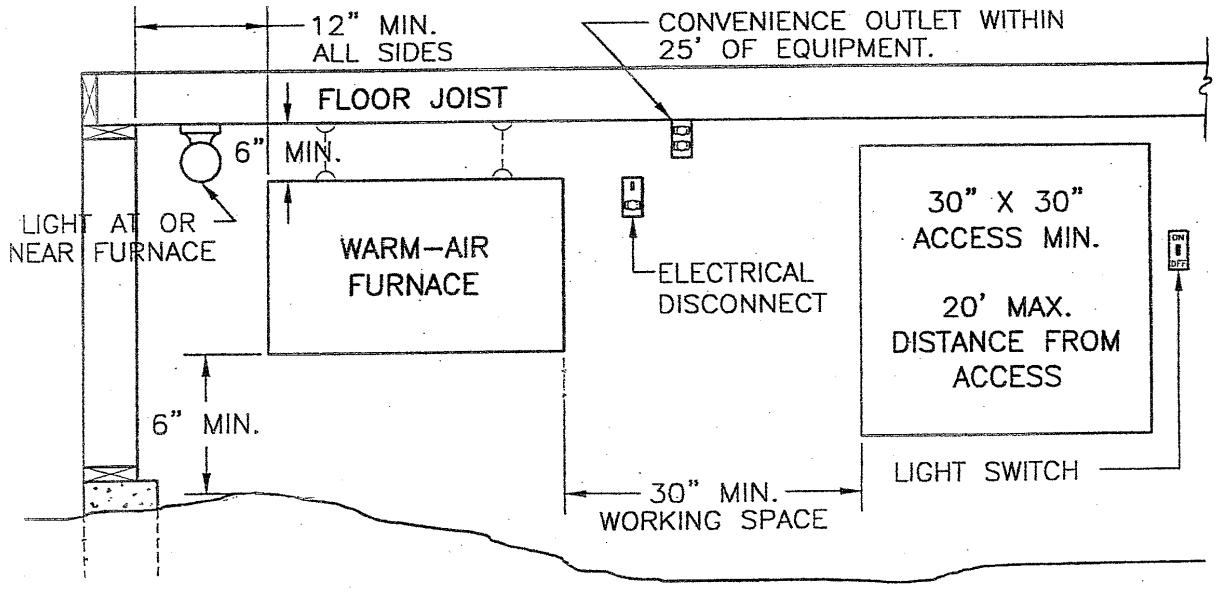

NOTE:
L.P.G. SERVICE, FACILITIES, SUPPLY, OR STORAGE SHALL **NOT** BE INSTALLED IN A BASEMENT, PIT, OR CRAWLSPACE.

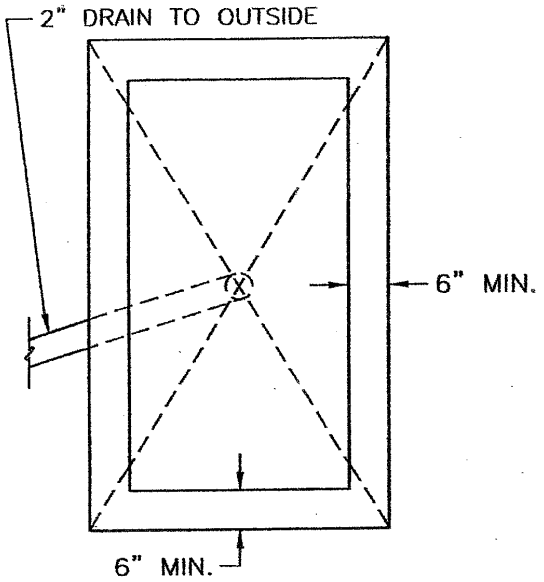

SHEET METAL DRAIN PAN SUSPENDED

TOP

SEE ILLUSTRATIONS FOR UNDERFLOOR FURNACE INSTALLATIONS.

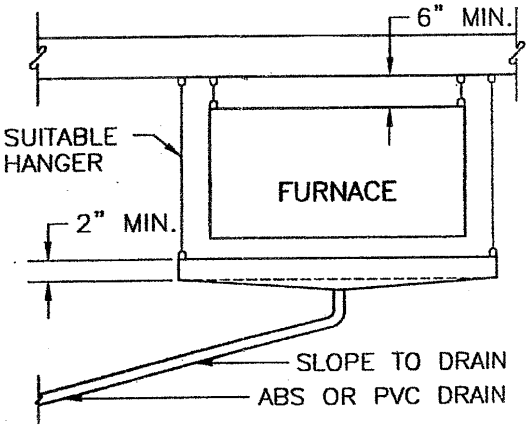

FRONT

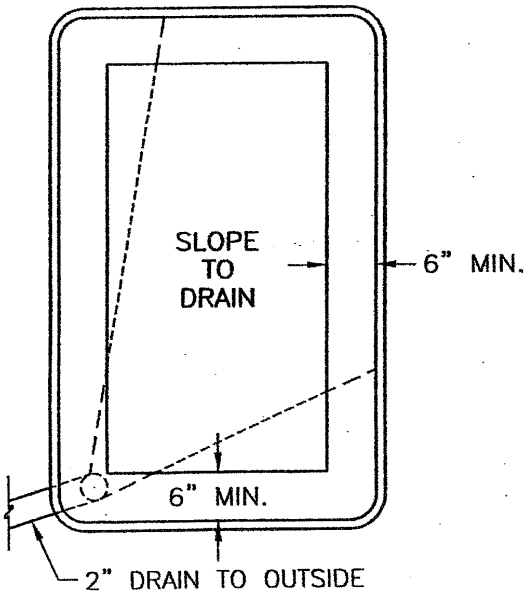

TOP

DRAIN PAN ILLUSTRATIONS ON THIS PAGE ARE ONLY FOR **ATTIC** INSTALLATIONS OF L.P.G. UNITS.

VENTS ARE ALSO REQUIRED AT THE LOWEST PART OF THE ATTIC.

L.P.G. UNITS SHALL NOT BE INSTALLED UNDER THE HOUSE.

GAS UNITS INSTALLED IN BEDROOMS OR BATHROOMS HAVE STRICT LIMITATIONS REGARDING TYPES AND BTU RATINGS - CHECK WITH YOUR LOCAL BUILDING OFFICAL BEFORE INSTALLING ANY GAS UNIT ANYWHERE EXCEPT IN A GARAGE OR ATTIC.

This page for illustration use only

TYPICAL PORCH CONSTRUCTION

(1) LEDGER: LAG BOLTS INTO EXISTING STUDS OR RIM JOIST @ 32" O.C.

(2) ROOF PITCH LESS THAN 3-12 REQUIRES #90 ROLLED ROOFING

(3) OPTIONS: ASPHALT, FIBERGLASS, CONCRETE, OR WOOD SHAKES; TILE, METAL, ETC.

(4) SEE FRONT VIEW OPTIONS (BELOW)

(5) 2" X 8" FLOOR JOISTS @ 16" O.C. NEEDED FOR THIS SIZE ROOM. SEE SPAN TABLES FOR LUMBER SIZES REQUIRED FOR YOUR PROJECT.

(6) (2) 1/2" VERTICAL REBARS EMBEDDED 6" INTO CONCRETE (4 REBARS FOR 2 STORY)

(7) (2) 1/2" HORIZONTAL REBARS (LOWEST 1/3 OF CONCRETE)

(8) 1/2" X 10" ANCHOR BOLTS

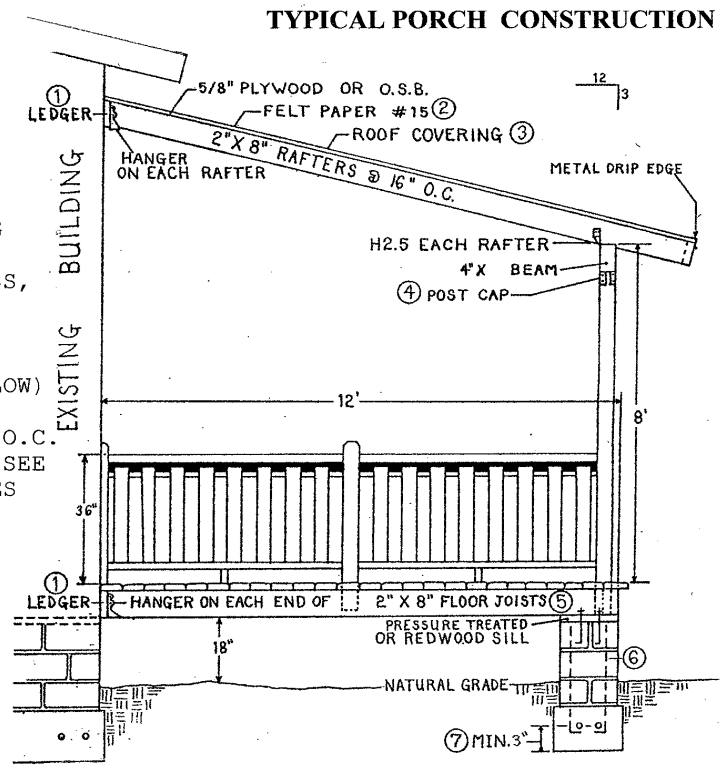

NOTE: WHEN ENCLOSING AN EXISTING PORCH INTO LIVING AREA, A NEW BUILDING PERMIT IS REQUIRED.

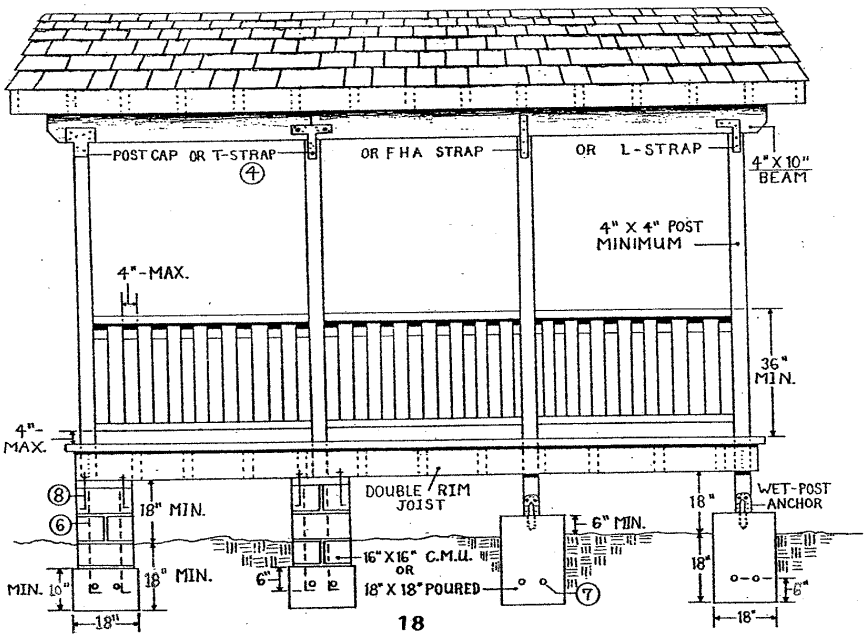

This page for illustration use only

(1) LEDGER: LAG BOLTS INTO EXISTING STUDS OR RIM JOIST @ 32" O.C.

(2) IF ROOF PITCH IS LESS THAN 3-12, #90 ROLLED ROOFING IS REQUIRED

(3) OPTIONS: ASPHALT (COMPOSITION), FIBERGLASS, CONCRETE, OR WOOD SHAKE SHINGLES; TILE, METAL, OR ROLLED ROOFING, ETC.

(4) 3/4" T & G PLYWOOD FLOOR

(5) 2" X 8" FLOOR JOISTS @ 16" O.C. NEEDED FOR THIS SIZE ROOM. SEE SPAN TABLES FOR LUMBER SIZES REQUIRED FOR YOUR PROJECT.

(6) (2) 1/2" VERTICAL REBARS EMBEDDED 6" INTO CONCRETE

(7) (2) 1/2" HORIZONTAL REBARS 6" BELOW CONCRETE SURFACE

(8) 1/2" X 10" ANCHOR BOLTS

(9) AIR FILTRATION BARRIER

(10) SIDING OPTIONS: LOG, T1-11, ALUMINUM, MASONITE, LAP, VINYL, ETC.

(11) CORNER CHANNEL

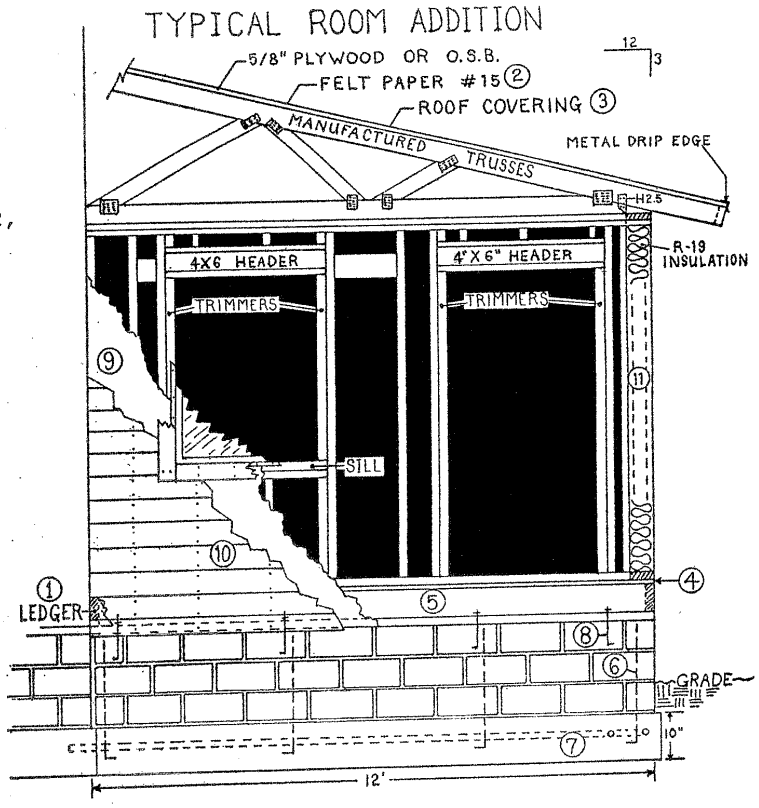

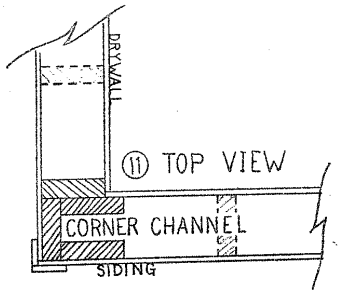

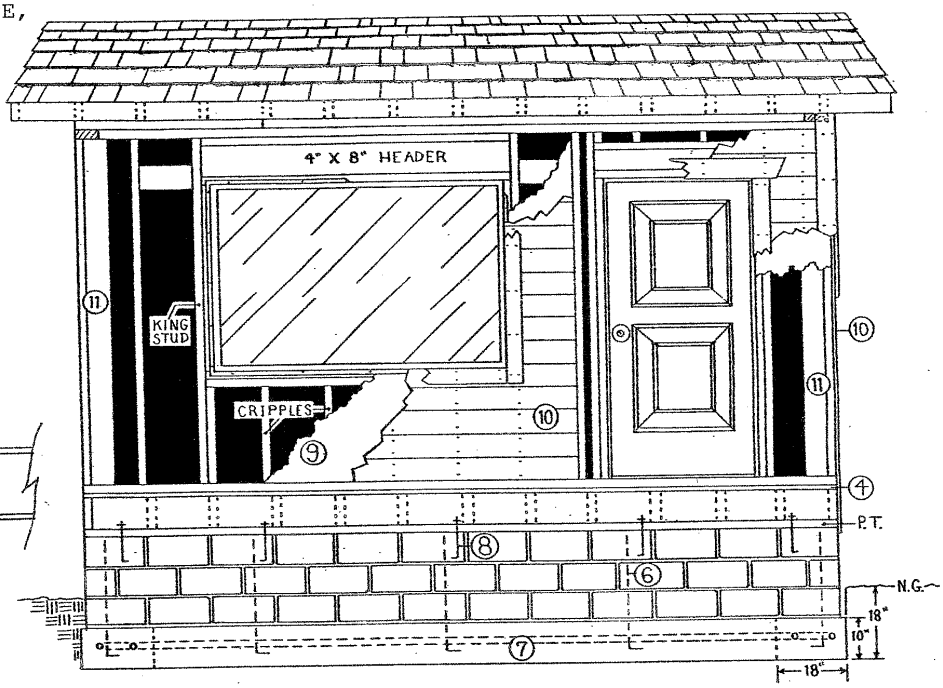

FRAMING TERMINOLOGY

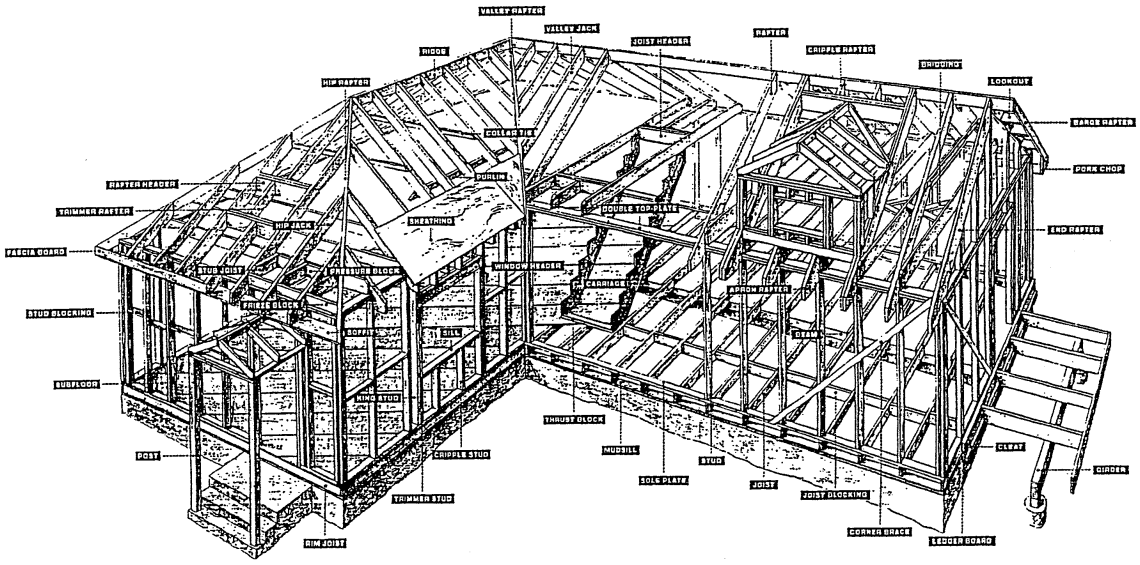

Girder and Header Spans for Exterior Bearing Walls

Girders / Headers Supporting	SIZE	Building Width (a)					
		20 feet		28 feet		36 feet	
		Span	Jacks	Span	Jacks	Span	Jacks
SINGLE STORY	2-2x4	3’6”	1	3’2”	1	2’10”	1
	2-2x6	5’5”	1	4’8”	1	4’2”	1
	2-2x8	6’10”	1	5’11’	2	5’4”	2
	2-2x10	8’5”	2	7’3”	2	6’6”	2
	2-2x12	9’9”	2	8’5”	2	7’6”	2
	3-2x8	8’4”	1	7’5”	1	6’8”	1
	3-2x10	10’6”	1	9’1”	2	8’2”	2
	3-2x12	12’2”	2	10’7”	2	9’5”	2
	4-2x8	7’0”	1	6’1”	2	5’5”	2
	4-2x10	11’8”	1	10’6”	1	9’5”	2
	4-2x12	14’1”	1	12’2”	2	10’11”	2
TWO STORY	2-2x4	2’8”	1	2’4”	1	2’1”	1
	2-2x6	3’11”	1	3’5”	2	3’0”	2
	2-2x8	5’0”	2	4’4”	2	3’10”	2
	2-2x10	6’1”	2	5’3”	2	4’8”	2
	2-2x12	7’1”	2	6’1”	3	5’6”	3
	3-2x8	6’3”	2	5’5”	2	4’10”	2
	3-2x10	7’7”	2	6’7”	2	5’11”	2
	3-2x12	8’10”	2	7’8”	2	6’10”	2
	4-2x8	5’1”	2	4’5”	2	3’11”	2
	4-2x10	8’9”	2	7’7”	2	6’10”	2
	4-2x12	10’2”	2	8’10”	2	7’11”	2

(a): Building width is measured perpendicular to the ridge
Jacks: Number of jack studs (trimmers) required to support each end

HEADER SPANS FOR INTERIOR NON-BEARING WALLS

SIZE	MAXIMUM SPAN
4x4 or 2-2x4	**3'**
4x6 or 2-2x6	**6'**
4x8 or 2-2x8	**8'**
4x10 or 2-2x10	**10'**
4x12 or 2-2x12	**12'**
Note: All lumber to be placed on edge	

ALLOWABLE SPANS FOR JOISTS AND RAFTERS

	LL=40 DL=10	LL=40 DL=15		LL=45 DL=15	
Lumber Sizes	**Floor Joists** No Drywall Below 1*	**Floor Joists** Drywall Below	**Ceiling Joists** With Drywall	**Rafters 0:12 up to 4:12 Pitch 2***	**Rafters 4:12 Pitch or More 2***
2x4 @ 12" O.C.			**9'8"**		
2x4 @ 16" O.C.			**8'3"**		
2x4 @ 24" O.C.			**7'8"**		
2x6 @ 12" O.C.	**10'8"**	**9'9"**	**15'2"**	**11'2"**	**12'0"**
2x6 @ 16" O.C.	**9'6"**	**8'10"**	**13'9"**	**9'9"**	**10'8"**
2x6 @ 24" O.C.	**8'4"**	**7'8"**	**12'0"**	**7'11"**	**8'8"**
2x8 @ 12" O.C.	**13'10"**	**12'10"**	**19'11"**	**14'10"**	**16'0"**
2x8 @ 16" O.C.	**12'8"**	**11'8"**	**18'1"**	**12'10"**	**14'8"**
2x8 @ 24" O.C.	**10'3"**	**10'2"**	**15'10"**	**10'6"**	**11'6"**
2x10 @12" O.C.	**17'8"**	**16'5"**	**25'5"**	**18'11"**	**20'0"**
2x10 @16" O.C.	**16'0"**	**14'11"**	**21'9"**	**16'4"**	**17'7"**
2x10 @24" O.C.	**12'9"**	**12'3"**	**20'2"**	**13'4"**	**14'8"**
2x12 @12" O.C.	**21'6"**	**19'11"**		**23'0"**	**24'6"**
2x12 @16" O.C.	**18'6"**	**17'9"**		**19'11"**	**21'8"**
2x12 @24" O.C.	**15'0"**	**14'4"**		**16'3"**	**17'9"**

Notes: Joists calculated @ LL deflection = 360, DL deflection = 240 with ¾" Min. Sheathing
All spans based on Douglas Fir Lumber: **1*** = #1 or Better **2*** = Select Structural
Reduce spans by 10% if Pine Lumber is used.